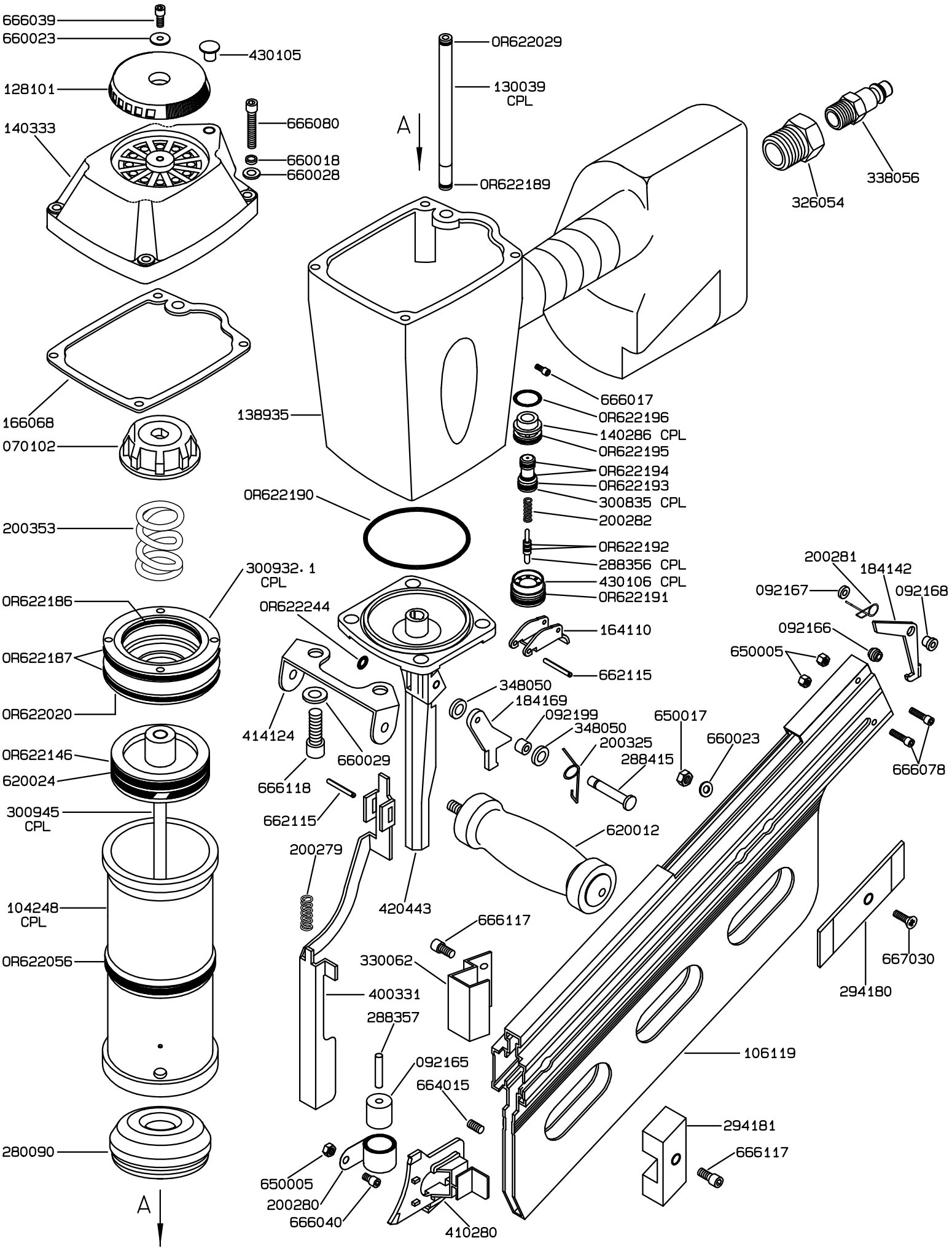ESP	MACHINE CODE	MACHINE CODE	MACHINE CODE	MACHINE CODE	MACHINE CODE
1	11302.02				
DESC.	F91AC RHN20-160